✔

✔

✔ RFID

✔ RFID

✔ RFID

	+4.5V +6V
	< 20mA
	5V 33dBm 2000mA
	78.55×53.5×7.95mm
	ISO 18000-6C/6B/EPC C1G2/GBT 29768-2013/GJB 7377.1 A-2018
	920 925MHz 902 928MHz 865 868MHz
	33dBm±1dB MAX
	±1dB
	≤-85dBm
RSSI	
	TTL UART (115200bps 8 1)
	SMA 15PIN 1.25mm

ᄉ ˜ 6V ᄀ ˜ شخ

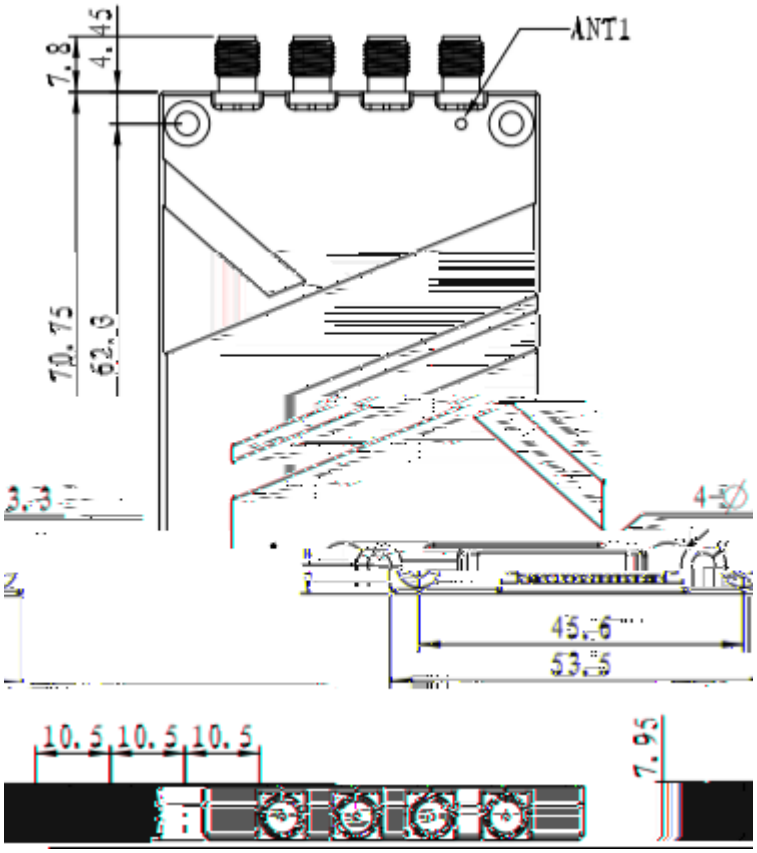

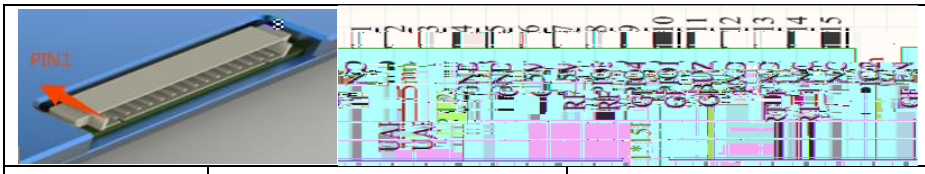

1	GND	ضر
2	GND	
3	4.5V-6V DC	
4	4.5V-6V DC	
5	GPIO3	3.3V
6	GPIO4	3.3V
7	GPIO1	3.3V
8	BUZ	كح 3.3V
9	UART_RXD	TTL
10	UART_TXD	
11	NC	NC
12	NC	
13	GPIO2	3.3V